1500 kVA 11 / 0,4 kV DIMENSION DRAWING

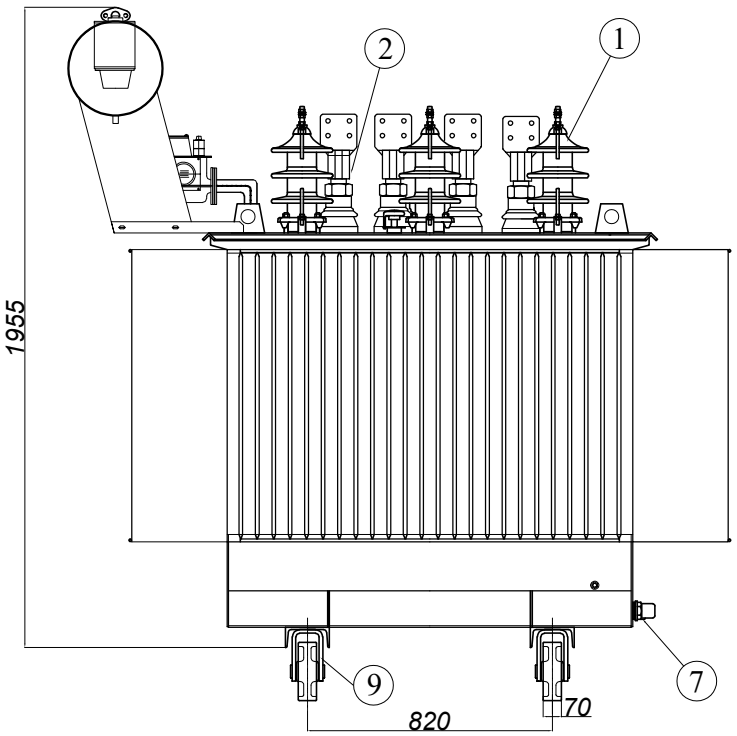

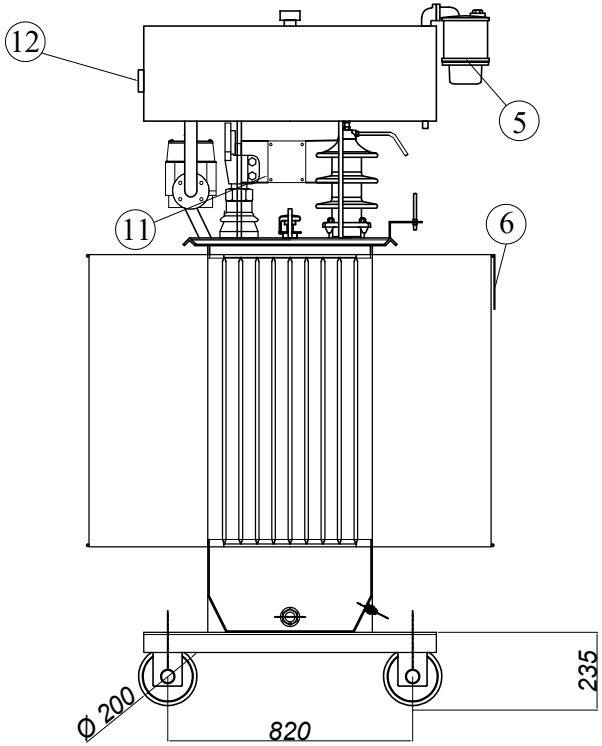

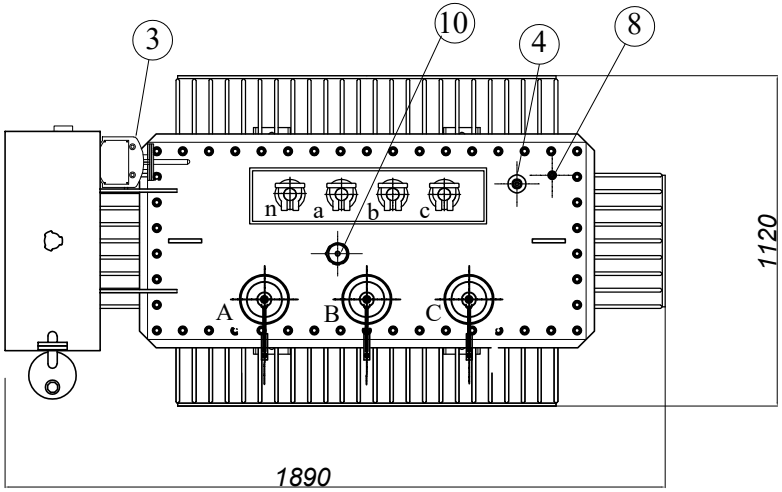

POS.	DESCRIPTION
1	H.V. Porcelain Bushings 20 NF 250 A
2	L.V. Porcelain Bushings 1 kV 3150 A
3	Buchholz relay
4	Thermometer with 2 contacts
5	Silicagel and Dehydrating Breather
6	Rating plate
7	Oil drain valve
8	Earthing terminals
9	Wheels
10	Off Load Tap changer
11	Therminal connection box
12	Oil level indicator

Oil weight	=	720 kg.
Active part weight	=	1580 kg.
Total weight	=	3320 kg.

Length	=	1890 mm
Width	=	1120 mm
Height	=	1955 mm

ALL DIMENISONS AND WEIGHTS +/- % 10 TOLERANCE

OIL IMMERSED CONSERVATOR TYPE TRANSFORMER

DRAW.NO: 25210XX	DATE	NAME	SİGN
DRAWN			
CHECKED			
APPROVAL			

REV. NO :	00
REV.DATE :	00
PAGE NO :	1 / 1
TOLERANCE :	TS 1980 - 1
SCALE:	0

TİMSAN